Fig. 82-A (Rev. 9/94)
(New 10/66)

Archived 02/2015

TANKS AND SIMILAR UNITS UNDER 100,000 LB, CRAWLERS REMOVED—FLATCARS

Fig. 83 (Rev. 03/16)
(New 2/60)

TANKS AND SIMILAR UNITS 100,000 LB TO 140,000 LB—FLATCARS, DODX 140-TON, WITH CHAIN TIE-DOWNS

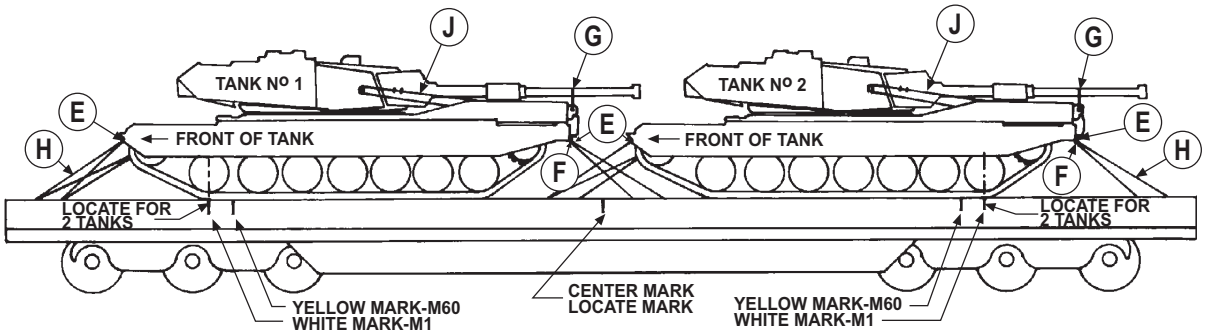

TWO M1 TANKS

TANK Nº 1

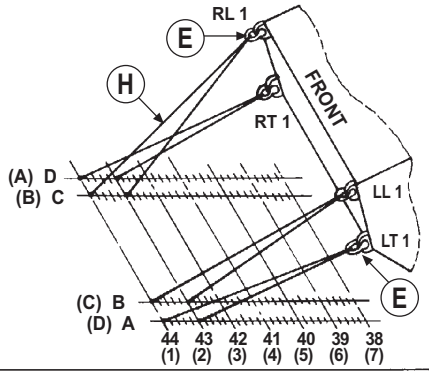

CHAIN ATTACHMENT POINTS FRONT OF TANK					
TANK	CAR DECK		TANK	CAR DECK	
LT1	A-43	(D-2)	RT1	D-43	(A-2)
LT1	A-44	(D-1)	RT1	D-44	(A-1)
LL1	B-43	(C-2)	RL1	C-43	(B-2)
LL1	B-44	(C-1)	RL1	C-44	(B-1)

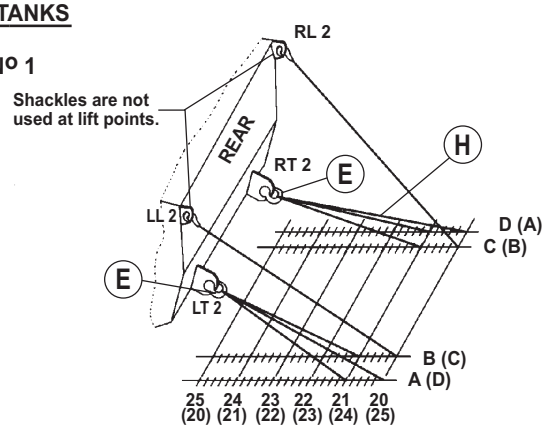

CHAIN ATTACHMENT POINTS REAR OF TANK					
TANK	CAR DECK		TANK	CAR DECK	
LT2	A-20	(D-25)	RT2	D-20	(A-25)
LT2	A-21	(D-24)	RT2	C-21	(B-24)
LT2	B-21	(C-24)	RT2	D-21	(A-24)
LL2	B-20	(C-25)	RL2	C-20	(B-25)

TANK Nº 2

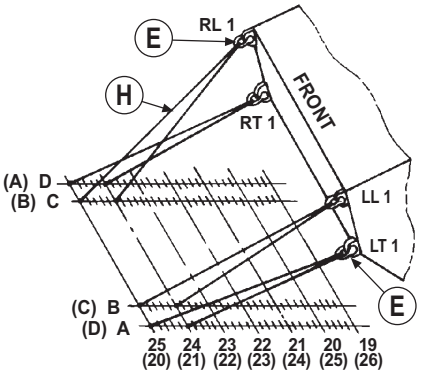

CHAIN ATTACHMENT POINTS FRONT OF TANK					
TANK	CAR DECK		TANK	CAR DECK	
LT1	A-24	(D-21)	RT1	D-24	(A-21)
LT1	A-25	(D-20)	RT1	D-25	(A-20)
LL1	B-24	(C-21)	RL1	C-24	(B-21)
LL1	B-25	(C-20)	RL1	C-25	(B-20)

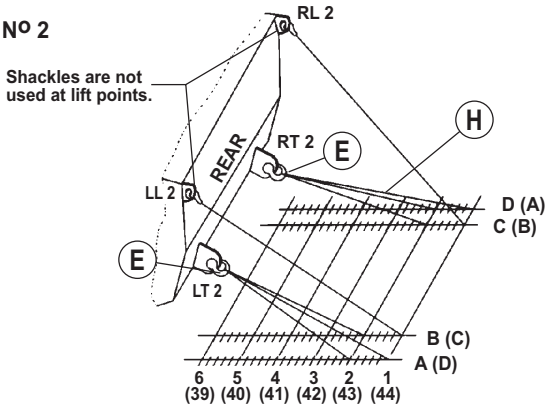

CHAIN ATTACHMENT POINTS REAR OF TANK					
TANK	CAR DECK		TANK	CAR DECK	
LT2	A-1	(D-44)	RT2	D-1	(A-44)
LT2	A-2	(D-43)	RT2	C-2	(B-43)
LT2	B-2	(C-43)	RT2	D-2	(A-43)
LL2	B-1	(C-44)	RL2	C-1	(B-44)

IMPLEMENTED 03/2016

Fig. 83 (Rev. 03/16) (Continued)
(New 2/60)

TANKS AND SIMILAR UNITS 100,000 LB TO 140,000 LB—FLATCARS, DODX 140-TON, WITH CHAIN TIE-DOWNS

TWO M60 TANKS

TANK Nº 1

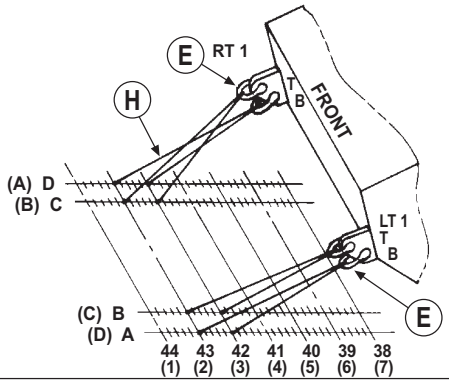

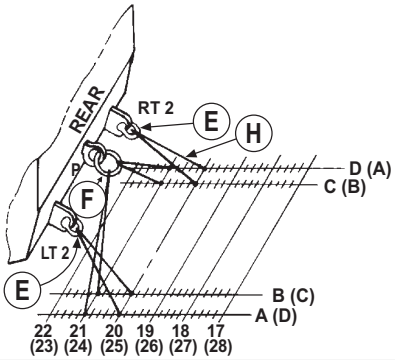

CHAIN ATTACHMENT POINTS FRONT OF TANK					
ANK	CAR DECK		TANK	CAR DECK	
T1-B	A-42	(D-3)	RT1-B	D-42	(A-3)
T1-B	A-43	(D-2)	RT1-B	D-43	(A-2)
T1-T	B-42	(C-3)	RT1-T	C-42	(B-3)
T1-T	B-43	(C-2)	RT1-T	C-43	(B-2)

CHAIN ATTACHMENT POINTS REAR OF TANK					
TANK	CAR DECK		TANK	CAR DECK	
LT2	A-20	(D-25)	RT2	D-20	(A-25)
LT2	B-20	(C-25)	RT2	C-20	(B-25)
P	A-21	(D-24)	P	D-21	(A-24)
P	B-21	(C-24)	P	C-21	(B-24)

TANK Nº 2

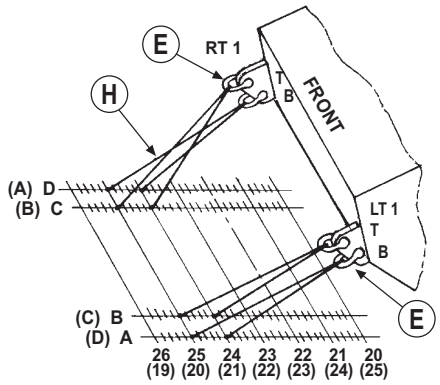

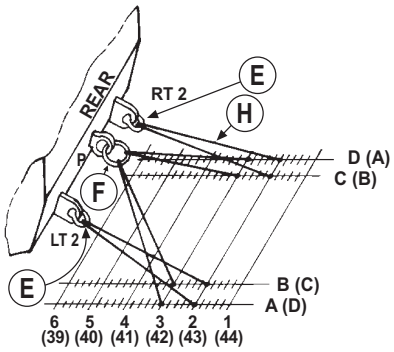

CHAIN ATTACHMENT POINTS FRONT OF TANK					
ANK	CAR DECK		TANK	CAR DECK	
T1-B	A-24	(D-21)	RT1-B	D-24	(A-21)
T1-B	A-25	(D-20)	RT1-B	D-25	(A-20)
T1-T	B-24	(C-21)	RT1-T	C-24	(B-21)
T1-T	B-25	(C-20)	RT1-T	C-25	(B-20)

CHAIN ATTACHMENT POINTS REAR OF TANK					
TANK	CAR DECK		TANK	CAR DECK	
LT2	A-2	(D-43)	RT2	D-2	(A-43)
LT2	B-2	(C-43)	RT2	C-2	(B-43)
P	A-3	(D-42)	P	D-3	(A-42)
P	B-3	(C-42)	P	C-3	(B-42)

IMPLEMENTED 03/2016

Fig. 83 (Rev. 03/16) (Continued)
(New 2/60)

TANKS AND SIMILAR UNITS 100,000 LB TO 140,000 LB—FLATCARS, DODX 140-TON, WITH CHAIN TIE-DOWNS

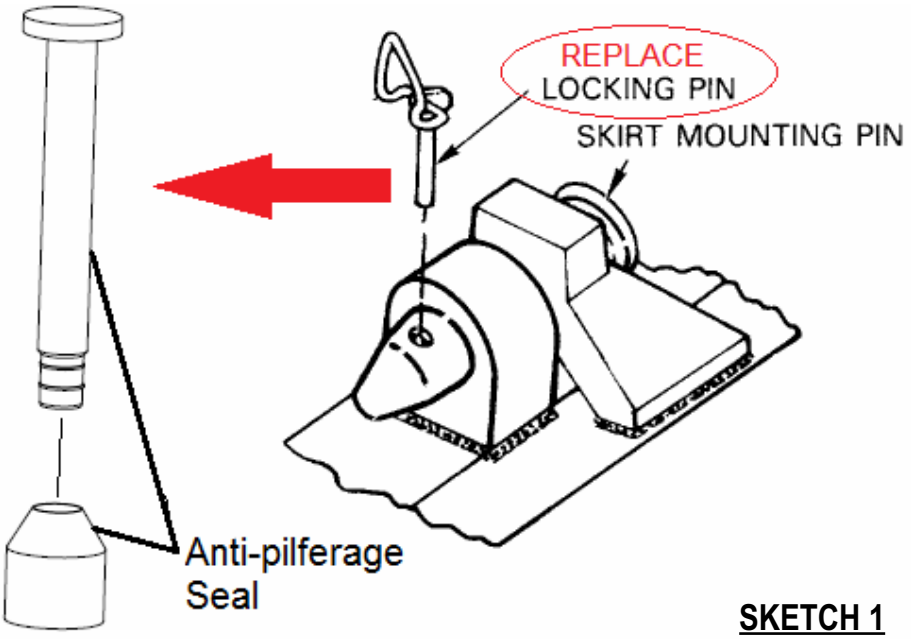

SKETCH 1

Item	No. of Pcs.	Description
A through D		These letters are used to identify chain tie-down channels on the car. Car deck is marked accordingly.
E	6 per tank. 8 per M60 tanks when Item F is omitted.	Shackles: heat treated to 150,000-lb minimum breaking strength, alloy steel, screw-pin or safety (bolt-pin) anchor shackle (with 1 3/8-in. pin). M1 tank: attach one shackle to each front tow lug and one shackle to the smaller hole in each lifting eye bracket. At rear of tank, attach one shackle to each tow lug. M60 tank: attach one shackle to both the upper and lower holes in each front tow lug. (Lifting eyes not used.) At rear of tank, attach one shackle to each tow lug (see Note 11 when Item F link is not used). At rear of tank, attach one shackle to each tow lug. Shackles are not used at the rear lift points.
F	1 per tank.	Link: 200,000-lb minimum breaking strength, 1 3/4-in. alloy steel, 7-in. I.D. or other size suitable to fit pintle and accept four chain assembly hooks. Attach to towing pintle at rear of tank. Use optional. When omitted for M60 and similar tanks, refer to Note 11.
G	2 per tank.	Wire rope: 3/8 in., 6 × 19 IWRC IPS. Wrap gun tube with protective material in area between rear lifting eyes. Apply wire rope in two separate complete loops, one around the gun tube to the left rear lifting eye, the other around the gun tube to the right rear lifting eye. Tension the cable only enough to take slack out, and secure each loop with two 3/8-in. cable clips. (Not required if tank has operable external gun tube brace.)
H	16 per tank.	Single chain tie-down assembly: with 1/2-in.-diameter special alloy steel chain, 13,750-lb working load limit (proof tested to 27,500 lb). Apply chains between vehicle tie-down points and anchor locations identified on the deck of the car as shown in the loading diagram (see chain attachment point tables). If using chain assemblies that anchor to round holes in the car deck, use anchor holes that align with the indicated anchor channel locations.
J	2 per tank.	Wire rope: complete loop, 3/8 in. IWRC IPS. If gun tube is not installed in the turret, secure turret to hull with 3/8-in. wire rope to prevent turret rotation and secure each loop with two 3/8-in. cable clips. Not required if Item G is used.
K	6 per tank.	Approved anti-pilferage seals. Replace six spring locking pins with approved anti-pilferage seals (part number NSN 5340-01-260-9935). See Sketch 1.

IMPLEMENTED 03/2016

Fig. 83 (Rev. 03/16) (Continued)
(New 2/60)

TANKS AND SIMILAR UNITS 100,000 LB TO 140,000 LB—FLATCARS, DODX 140-TON, WITH CHAIN TIE-DOWNS

Notes and Additional Requirements:

1. The car is equipped with a hand brake lever at lower edge of side sill. Lading on car deck will not interfere with brake lever operation.
2. The loading figure (see chain attachment points) illustrates tie-down arrangements for two M1 tanks or M60 tanks, but other tanks and similar tracked vehicles may be loaded using a similar tie-down pattern. When loading other such units, the number and location of chain securement may vary from the arrangement shown, depending on the size and weight of vehicle and location of the tie-down fittings. The originating carrier must approve the load before shipments are made.
3. When tanks are loaded facing in the opposite direction from that on the loading figures (see chain attachment points), the tie-down pattern will remain as shown, but the numbered chain anchor location and channel letter would be transposed as shown in parentheses "( )".
4. Transmission shall be in neutral. Set the parking brake (if it is available and operational) to prevent the vehicle from inadvertently moving during the securement and unloading processes.
5. Turret gun must be in the aft travel position (with respect to the tank) and secured in a travel lock or with wire rope, Item G. Turret rotation and gun elevating control must be engaged and wire tied, if feasible, to restrict movement of turret and gun.
6. Ensure vertical skirt hinge pins are present and secure. Ensure the bolt on the swing latch on skirt one is tensioned properly. See TMs 9-2350-264-20-1-1 or 9-2350-388-23-1-2 for more details.

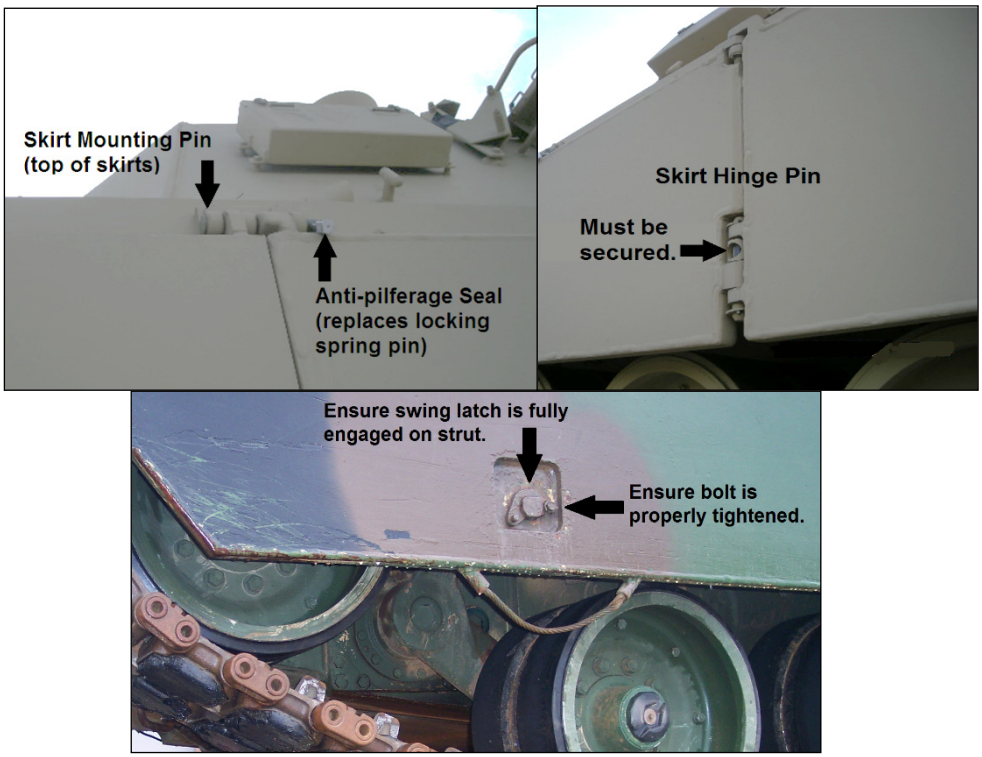

7. The vertical painted stripes on the railcar side sills indicate tank placements. Yellow for M60 tank(s), white for M1 tank(s). When two M1 or M60 series tanks are loaded, the forward left-hand road wheel of tank No. 1 and the rear left-hand road wheel of tank No. 2 are centered over its respective color stripe. One M60 shall be loaded so that the space between the third and fourth left-hand road wheels is centered over the center stripe on the side sill. Position one M1 tank with its fourth left-hand road wheel centered over the center stripe on side sill.
8. Tighten turnbuckles or tensioners of front and rear tie-downs at the same time to prevent uneven tensioning. Tighten each chain until only 1/8 in. of rubber is visible between the metal rings of the compression unit attached to the turnbuckle. If the chain assembly has a solid rubber shock mitigator rather than a compression unit, tighten the chain until the mitigator is slightly deformed (do not use a pipe or handle extender on the tensioner since that will result in too much tension). After tensioning, strike chain with a hammer or steel bar with enough force to eliminate any kinks in chain and retighten if necessary. Use two wrenches to tighten the jam nut against the turnbuckle to about 25 ft lb of torque.
9. Unused chains must be secured to the deck or stowed in the channels.

IMPLEMENTED 03/2016

Fig. 83 (Rev. 03/16) (Concluded)
(New 2/60)

TANKS AND SIMILAR UNITS 100,000 LB TO 140,000 LB—FLATCARS, DODX 140-TON, WITH CHAIN TIE-DOWNS

Notes and Additional Requirements (concluded):

10. Tanks shipped without tracks and road wheels must have lumber placed between hull and car deck to prevent metal-to-metal contact.
11. If the Item F link is not used on M60 and similar tanks, attach four chains from the floor anchor positions shown in the drawings, to each of the two rear tie-down provisions. This method requires eight Item E shackles per tank. At each tie-down provision, attach the first two chains to the Item E shackle. Attach an additional shackle to the first to provide room to attach the third and fourth chains.
12. The unmarked military shackles have a 1 1/2-in. body, a 4-in.-diameter opening at the bow, and a 1-in.-diameter screw-pin and were procured as MacLean-Fogg 61284 or Midland Forge MK0267. The national stock number (NSN) for the 4-in. opening shackle is 4030-01-391-2790 and some of the newer shackles are in fact marked "M1 TIEDOWN ALL TRANSPORT MODES" to aid recognition. Any tie-down point that requires three chains requires the shackle with a 4-in.-diameter or larger opening. For tie-down points that require no more than two chains, the 21-ton working load limit (WLL) shackle may be used. The 21-ton shackle (210,000-lb minimum breaking strength) is a 1 1/4-in.-size safety anchor shackle with a 1 1/4-in. body, a 3 1/4-in.-diameter opening at the bow, and a 1 3/8-in. bolt pin. The 21-ton shackle national stock number (NSN) is 4030-01-187-0964.
13. On HTTX-type chain assemblies, the open-hook part of the double adjustable grab hook must be secured with wire or a nylon wire tie to prevent the hook from becoming disengaged from the chain link to which it is secured. On DODX-type chain assemblies, neither the claw hook at the base of the chain nor the slip hook engaging the shackle or tie-down provision on the [LAV] vehicle needs to be secured with wire or nylon tie wrap.

Reference the General Rules in Section No. 1 of the *Open Top Loading Rules Manual* for additional details.

IMPLEMENTED 03/2016